การวัดอุณหภูมิ และความชื้นในอากาศ

อุปกรณ์

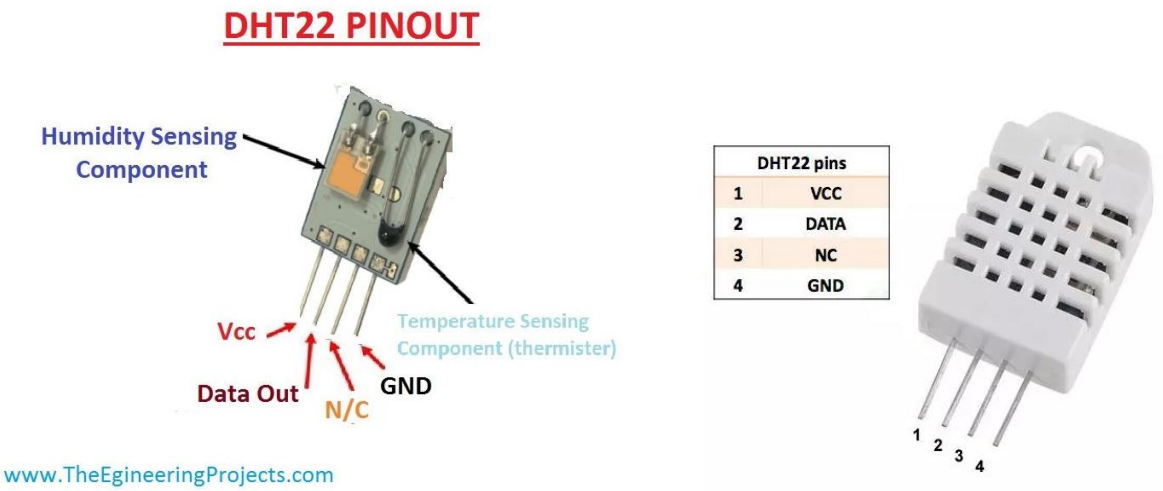

Pin No.	Pin Type	Description
1	Vcc	This is Power Pin at this pin we apply 3.5 v to 5.0 volts.
2	Data	Through this pin, we get outputs both Temperature and Humidity through serial Data.
3	NC	Empty pin
4	Ground	Ground Pin (Connected to 0V or GND)

Features & Specification of DHT22

These are some features of DHT22.

- The voltage it operates is 3.5v to 5.5v.
- Its operating current is 0.3v to 5.5.
- The protocol which it uses to send data is a serial transmission of data.
- Its temperature at which it operates is -40°C to 80°C.
- Its humidity range is 0% to 100%.
- Its temperature and humidity resolution are 16-bit.
- Its Accuracy is ±0.5°C and ±1%
- Its sampling rate is 0.5 Hz once every two seconds.
- Its dimensions are 27mm x 59mm x 13.5mm (1.05″ x 2.32″ x 0.53″).
- It has four pins with 0.1″ spacing.

- Its weight is 2.4g.
- It is a low-cost sensor. Its price is just $1 to $5.
- It has long term stability of ±0.5% per year.

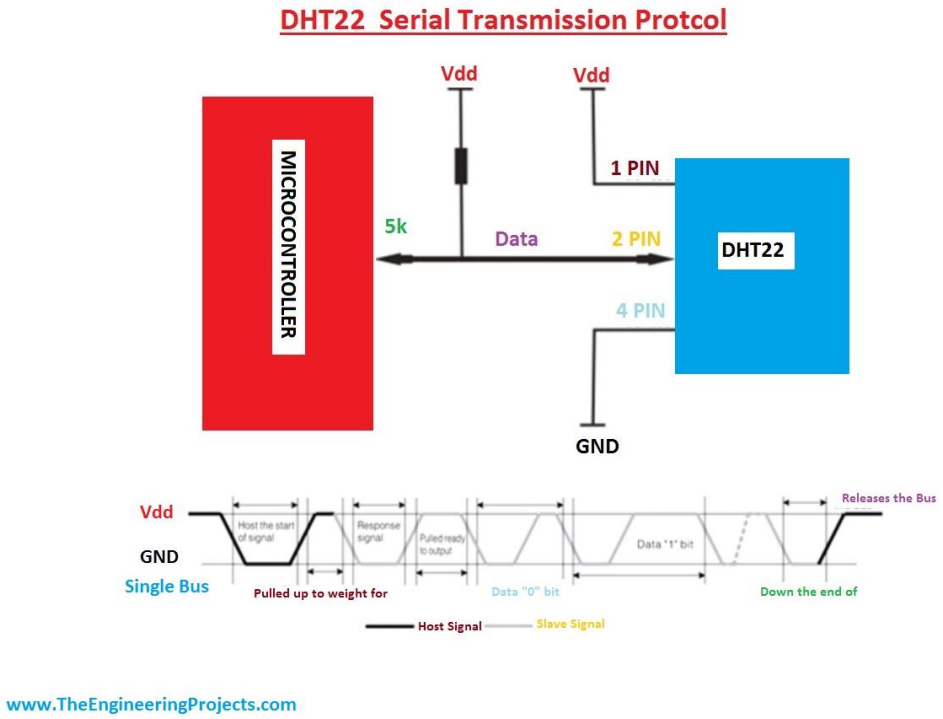

การต่อใช้งาน

DHT22 AM2302 Temperature-Humidity Sensor Mudule

วงจรการต่อใช้งาน

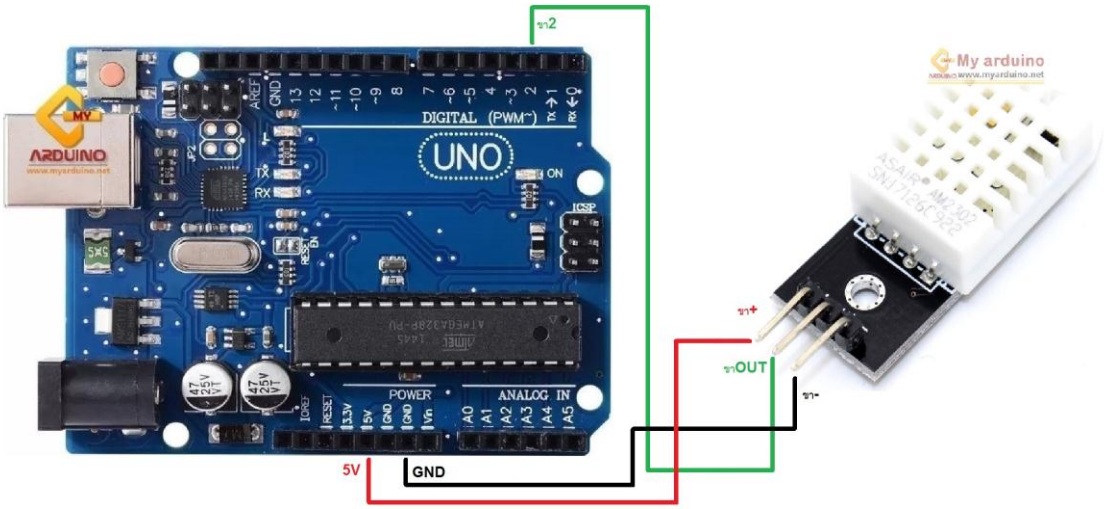

Library ที่เกี่ยวข้อง

DHT-sensor-library-master (DHT-sensor-library-master.zip)

Adafruit_Sensor-master (Adafruit_Sensor-master.zip)

โปรแกรมทดสอบ

```
// Example testing sketch for various DHT humidity/temperature sensors
// Written by ladyada, public domain

// REQUIRES the following Arduino libraries:
// - DHT Sensor Library: https://github.com/adafruit/DHT-sensor-library
// - Adafruit Unified Sensor Lib:
 https://github.com/adafruit/Adafruit_Sensor

#include "DHT.h"

#define DHTPIN 2     // Digital pin connected to the DHT sensor
// Feather HUZZAH ESP8266 note: use pins 3, 4, 5, 12, 13 or 14 --
// Pin 15 can work but DHT must be disconnected during program upload.

// Uncomment whatever type you're using!
//#define DHTTYPE DHT11   // DHT 11
```

```
#define DHTTYPE DHT22   // DHT 22  (AM2302), AM2321
//#define DHTTYPE DHT21   // DHT 21 (AM2301)

// Connect pin 1 (on the left) of the sensor to +5V
// NOTE: If using a board with 3.3V logic like an Arduino Due connect pin
1
// to 3.3V instead of 5V!
// Connect pin 2 of the sensor to whatever your DHTPIN is
// Connect pin 4 (on the right) of the sensor to GROUND
// Connect a 10K resistor from pin 2 (data) to pin 1 (power) of the sensor

// Initialize DHT sensor.
//  Note  that  older  versions  of  this  library  took  an  optional  third
parameter to
// tweak the timings for faster processors.  This parameter is no longer
needed
// as the current DHT reading algorithm adjusts itself to work on faster
procs.
DHT dht(DHTPIN, DHTTYPE);

void setup() {
  Serial.begin(9600);
  Serial.println(F("DHTxx test!"));

  dht.begin();
}

void loop() {
  // Wait a few seconds between measurements.
  delay(2000);

  // Reading temperature or humidity takes about 250 milliseconds!
  // Sensor readings may also be up to 2 seconds 'old' (its a very slow
sensor)
  float h = dht.readHumidity();
  // Read temperature as Celsius (the default)
  float t = dht.readTemperature();
  // Read temperature as Fahrenheit (isFahrenheit = true)
  float f = dht.readTemperature(true);

  // Check if any reads failed and exit early (to try again).
  if (isnan(h) || isnan(t) || isnan(f)) {
    Serial.println(F("Failed to read from DHT sensor!"));
    return;
  }

  // Compute heat index in Fahrenheit (the default)
  float hif = dht.computeHeatIndex(f, h);
  // Compute heat index in Celsius (isFahreheit = false)
  float hic = dht.computeHeatIndex(t, h, false);

  Serial.print(F("Humidity: "));
```

```
  Serial.print(h);
  Serial.print(F("%  Temperature: "));
  Serial.print(t);
  Serial.print(F(" C "));
  Serial.print(f);
  Serial.print(F(" F  Heat index: "));
  Serial.print(hic);
  Serial.print(F(" C "));
  Serial.print(hif);
  Serial.println(F(" F"));
}
```

```
#include "DHT.h"

#define DHTPIN 2     // ขาดิจิตอลที่ต่อกับ DHT sensor
#define DHTTYPE DHT22   // ใช้ DHT 22  (AM2302), AM2321

DHT dht(DHTPIN, DHTTYPE);

void setup() {
  Serial.begin(9600); // ความเร็วของ Serial monitor
  Serial.println(F("DHTxx test!"));

  dht.begin();
}

void loop() {
  // ช่วงเวลาที่รอการวัด
  delay(2000);

  // อ่านค่าอุณภูมิ หรือ ความชื้นสัมพัทธ์ จะใช้เวลาประมาณ 250 milliseconds!
  // Sensor readings may also be up to 2 seconds 'old' (its a very
slow sensor)

  float h = dht.readHumidity();
  // อ่านค่าอุณหภูมิเป็น Celsius (the default)
  float t = dht.readTemperature();
  // อ่านค่าอุณหภูมิเป็น Fahrenheit (isFahrenheit = true)
  float f = dht.readTemperature(true);

  // ตรวจสอบการค่าที่อ่านอ่านผิดพลาด.
  if (isnan(h) || isnan(t) || isnan(f)) {
    Serial.println(F("Failed to read from DHT sensor!"));
    return;
  }
```

```
  // Compute heat index in Fahrenheit (the default)
  float hif = dht.computeHeatIndex(f, h);
  // Compute heat index in Celsius (isFahreheit = false)
  float hic = dht.computeHeatIndex(t, h, false);

  Serial.print(F("Humidity: "));
  Serial.print(h);
  Serial.print(F("%  Temperature: "));
  Serial.print(t);
  Serial.print(F(" C "));
  Serial.print(f);
  Serial.print(F(" F  Heat index: "));
  Serial.print(hic);
  Serial.print(F(" C "));
  Serial.print(hif);
  Serial.println(F(" F"));
}
```